

M E L L I™

Application Guide

selux





Melli

A sophisticated luminaire range with endless optical and mounting options



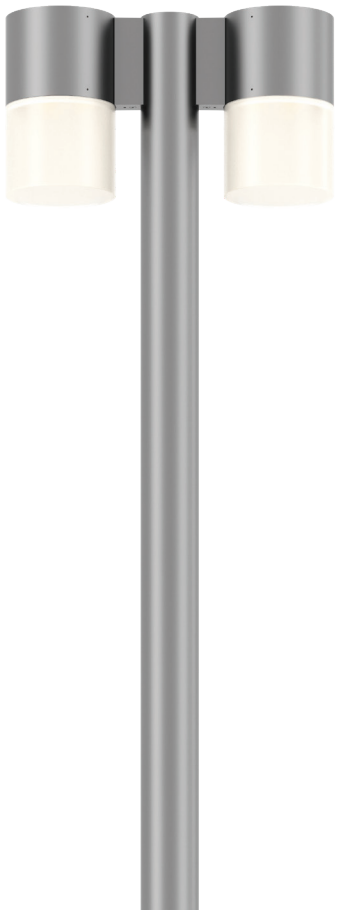





Optics

GEN5



Typical Applications
Local Road
Pedestrian Path
Parking Lot
Dark Sky Area

DIFFUSE



Typical Applications
Plaza
Shopping Center
Pedestrian Path
Ambient Area

SPOT



Typical Applications
Facade
Accent
Pedestrian Path
Dark Sky Area

A family of luminaires
with tailored options

Melli is a medium scale architectural indoor/outdoor luminaire family that transforms for applications that require strict precise roadway lighting, soft diffuse light, or even focused spot distributions. With Melli, the same form factor is implemented throughout the entire family - mix and match optics with any of the various mounting types for an aesthetically cohesive design.

Award Winning Product

Family



Wall direct/indirect
Wall direct
Sistema Wall

Double pole
mounted
with buried base
(consult factory)

Single pole
mounted with
banner arm
(consult factory)

Sistema pole
mounted

Double pole
mounted

Sistema pole
mounted

Catenary

Exterior Stem

Melli is available with three different light engines,
each with their own options

Gen5
Our proprietary Gen5 silicone optics provide a wide range of distributions for precise optical control and lower intensity angles. This optic is DarkSky approved at 3000K or warmer, and has the optional House Side Shield over each optic which enables shielding of the directional light. Choose from a short or long clear cylinder depending on the look you are going for.

Diffuse
Behind a diffuse lens is a mid-power light engine, creating an even, comfortably appearance and light distribution. Enhance the ambiance of your space with soft illumination from either the short or long diffuse cylinder.

Spot / COB
Add interest and drama to your lighting design with the Spot optics in Melli. The COB is seated behind one of four precise, specular reflectors, allowing different beams for different applications. Direct/Indirect for the Wall Mount can help create a visually interesting facade, or the Sistema mounting allows for aiming the light at specific areas or objects. When in the straight-down position, Melli Spot is DarkSky Approved in 3000K or warmer.

Gen5 Specifications



Light Engine:	Gen5
Distributions:	Type I · Type II · Type III · Type IV · Type V Round
Cylinder:	Short Clear · Long Clear
Output:	Up to 3,254lm · up to 116lm/W
CCT:	2700K · 3000K · 3500K · 4000K · 5000K 80CRI minimum
Mounting:	Surface · Wall · Catenary · Rigid Stem · Single Pole Mount · Double Pole Mount
Options:	House Side Shield

Standard Gen5 Distribtions:

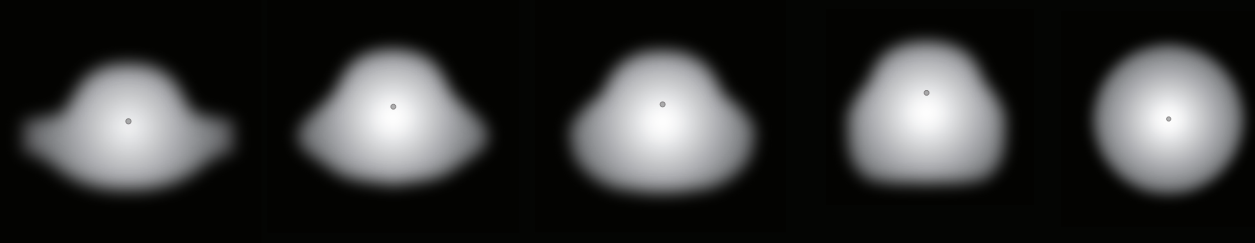

Type I | Type II | Type III | Type IV | Type V Round

House Side Shield Distribution:

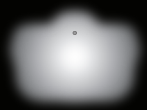

House Side Shield*

* Type I with house side shield shown - available with Type I, II, III, and IV.

DarkSky Approved

IP65

IK10

Gen5
is an optical advancement

An optical advancement that allows for a full range of distributions with excellent visual comfort, Gen5 is a proprietary design made of silicone, integrated into Melli to expand distribution options, increase lumen output, and provide a visual experience unique to Selux.

By keeping the vertical maximum intensity angle below 69°, Gen5 optics minimize brightness at critical viewing angles, and spreads brightness between the LEDs, reducing contrast and increasing visual comfort.

House Side Shield
blocks light at the source

Instead of the typical house side shield that obstructs the look of the luminaire as well as interrupting the flow of a lighting design, Selux has created an exclusive discrete house side shield that clips directly to the Gen5 optic, blocking light at the source. House side shield is only available with Type I, II, III, and IV.



Gen5



Gen5
with House-Side Shield

Diffuse Specifications

Light Engine: Diffuse

Cylinder: Short Diffuse · Long Diffuse

Output: Up to 4,703lm · up to 136lm/W

CCT: 2700K · 3000K · 3500K · 4000K · 5000K · 80CRI minimum

Mounting: Surface · Wall · Catenary · Rigid Stem · Single Pole Mount · Double Pole Mount



Short Diffuse

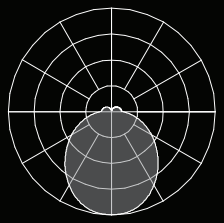

Long Diffuse

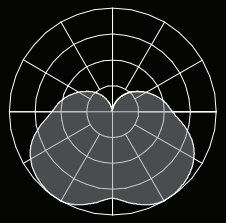

IP65

IK10

Spot Specifications

Light Engine: Spot

Optics: Spot 9° · Spot 20° · Flood 40° · Flood 80°

Output: Up to 2,908lm · Up to 89lm/W

CCT: 2700K · 3000K · 3500K · 4000K · 5000K
80CRI Minimum

Mounting: Surface · Wall (Direct or Direct/Indirect) · Catenary · Rigid Stem · Single Pole Mount · Double Pole Mount · Sistema Pole Mount · Sistema Wall Mount

Options: Honeycomb Louver · Spread Lens · Color Filter · Snoots - Full, 30°, 45° (Sistema only)



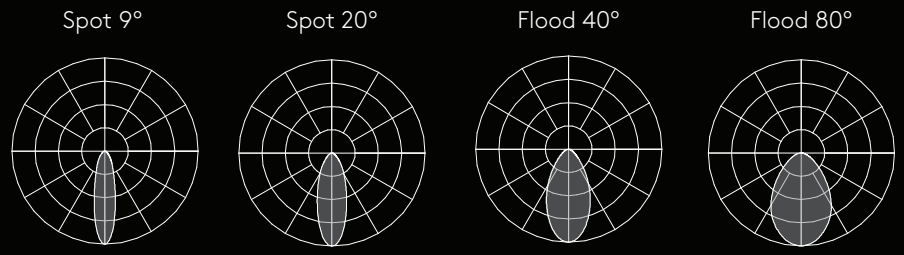

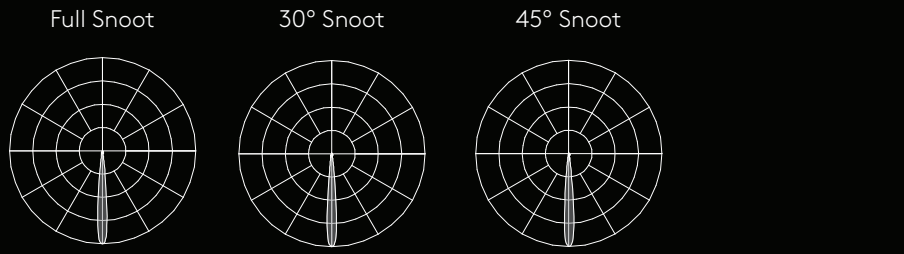

DarkSky Approved

IP65

IK07

Two lighting solutions
designed to enhance Melli Spot

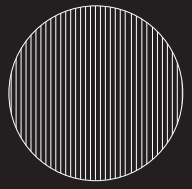

Linear Spread Lens



The Linear Spread Lens creates either a Horizontal or Vertical distribution of the light, and is field-rotatable, allowing for complete control over light manipulation.

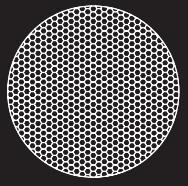

Honeycomb Louver



The Honeycomb Louver reduces glare without adding length to the luminaire, while hiding the source of light through its sleek design.

Melli Snoots

help enhance the level of control over your light

FULL SNOOT



Provides beam control and reduces glare on the luminaire - tightens the beam and creates a crisp cutoff.

30° SNOOT



Ideal for a more ambient lighting, reduces glare from the luminaire and creates a feathered cutoff.

45° SNOOT



Also for ambient lighting, reduces glare from the luminaire more than the 30° and creates a feathered cutoff.



POLE MOUNT



Creative opportunities are abundant,

with so many possible configurations

Melli attaches to round poles with a threaded insert - this method allows luminaires to be placed almost anywhere on a pole. Single or Double standard mounting allows you to double your light without doubling the number of poles needed.

On a project-specific basis, Melli could have two or more luminaires at different heights, which would allow for illuminating a road or parking area as well as a sidewalk from the other side of the same pole. This allows you to create even more unique lighting solutions without adding multiple poles.

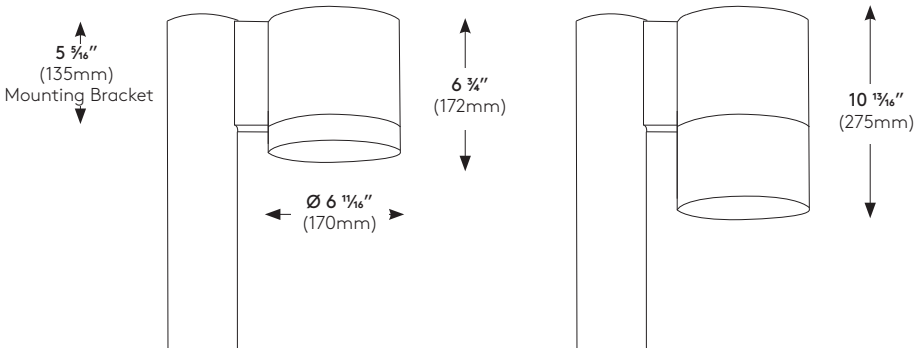

Short Cylinder

Long Cylinder



Pole Options

(for use with Pole or Sistema Pole fixtures)

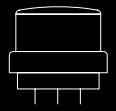

Photocell

The twist-lock photocell conserves energy and improves safety and security by automatically turning lights on when it gets dark. It also saves on energy by turning off at dawn when extra light is unnecessary.

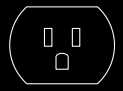

GFCI

The outdoor GFCI duplex receptacle is intended for portable tools and equipment when attended by personnel. It is weatherproof with its self-closing cover - for use with or without padlock.

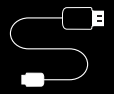

USB & Duplex Receptacle

The outdoor GFCI receptacle with USB charging port is intended for portable tools and equipment when attended by personnel. The USB charging port allows convenient charging of smart phones or other low voltage electronics.

SISTEMA MOUNT



Customizing light direction and intensity

to enhance any setting's ambiance.

Melli Sistema has an adjustable mounting that allows for 360° and 90° tilt. Combining the rotation with the tilt provides +/- 90° range for precise orientation of the luminaire head, adding a great deal of creative freedom. Luminaire heads can be arranged single or staggered at various heights around a pole. With the options of a Full Snoot, 30° Snoot, 45° Snoot, and Honeycomb Louver, Melli Sistema offers a range of beam control and design opportunities.

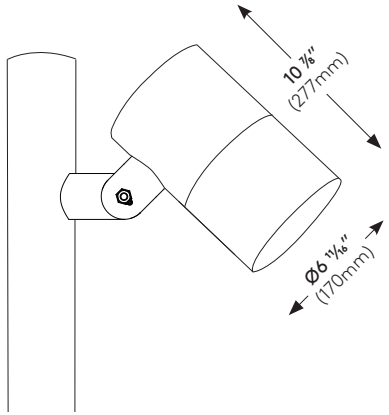

Sistema Pole

TILT

Melli Sistema has an adjustable mounting that allows for 360° rotation and 90° tilt. Combining the rotation with the tilt provides +/- 90° range for precise orientation.

Embedded hash marks on the adjustable arm provide an easy visual for aiming and aligning fixtures.





WALL
SURFACE
STEM
SISTEMA









Emphasizing architectural detail

with an elegant, contemporary look

Melli Wall, Surface, Stem, and Sistema, luminaires are most commonly for use along building facades and overhangs to provide visual guidance for pathways, identify doorways, and brighten entrances.

Wall Mount fixtures are available in two styles - Direct or Direct/Indirect - and can be used for ambient lighting to enhance aesthetic appeal. Use Melli Wall Mount to create a mood or make dramatic accent lighting effects for beautiful facade lighting.

Melli Stem, or Surface Mounts suspend from ceilings or exterior canopies to provide illumination for interior or exterior entranceways.

Melli Wall can be placed strategically along the sides of a building, around a dark corner, or in a narrow space to brighten or highlight walkways and paths.

Melli Sistema provides a range of beam angles creating a versatile addition to any space.

Melli can also be used as an interior light perfect for task lighting and creating a better lit area around those spaces that need a little bit of extra light. Melli can also be Wall, Surface, or Catenary mounted in interior spaces and can be used in offices, hospitality, foyers, and entryways.

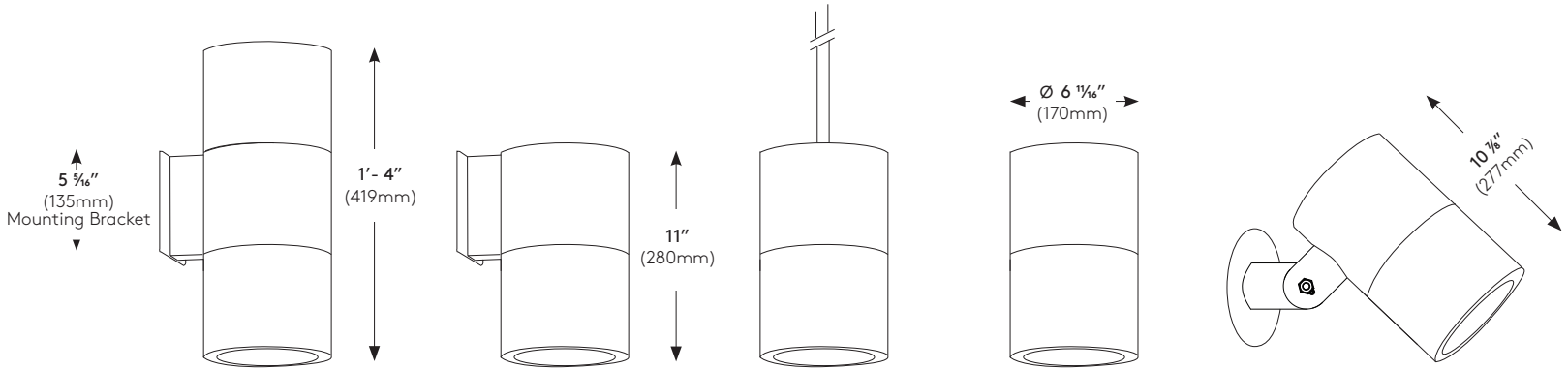

Wall Direct/Indirect Spot

Wall Spot

Interior/ Exterior Stem Spot

Surface Spot

Wall Sistema








RECEPTION



CATENARY

Melli™ Catenary Diffuse



Melli Catenary with
Diffuse Long Cylinder

Melli Catenary with
Diffuse Short Cylinder



Melli Catenary Gen5
Clear Long Cylinder

Melli Catenary Gen5
Clear Short Cylinder

DARKSKY APPROVED
Reduces light pollution
Certified by DarkSky.org

Melli™ Catenary Spot



Melli Catenary
Spot

Melli Catenary Spot
with Honeycomb Louver

DARKSKY APPROVED
Reduces light pollution
Certified by DarkSky.org

Melli™ Catenary



What Can Selux Provide?

Selux can offer the complete solution. By submitting a completed Catenary Design Guide Form, Selux will build a catenary package fully engineered with supporting poles, cables, cords, and luminaires. Anchoring catenary systems to buildings or structures not provided by Selux will have to be evaluated by the on-site Professional Engineer (PE).

Catenary suspended luminaires require additional materials for proper installation of the lighting system. These additional materials include structural tension cable for luminaire suspension, fittings for attachment to the building structure or structural masts/poles, and cable ends. Stainless steel is recommended due to its resistance to corrosion, strength, long life, and aesthetic appearance. Reference the luminaire weight and EPA on product specification sheet.

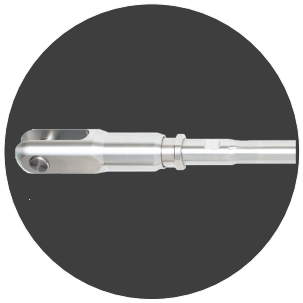

Clevis Assembly & Adjustable Turnbuckles
Manual adjustment is provided by rotating the adjusting sleeve.

Stainless Steel Structural Tension Cable
Offers the best combination of strength and stiffness for static structures. As spans and loads increase, the cables get larger in diameter (the number of strands increases).





Poles & Anchor Points
Selux can provide mounting points for poles or anchored brackets to buildings or structures. Selux can provide calculations and size the poles appropriately on a project-specific basis. Brackets to structure must be evaluated by on-site PE.

Professional Engineer Stamped Drawings
Selux can provide stamped drawings (if required) for a fee. It is important to identify this at the early stages of the project so the cost can be included in the budget. Stamped drawings may extend the lead time.



Example Pole Anchor Detail

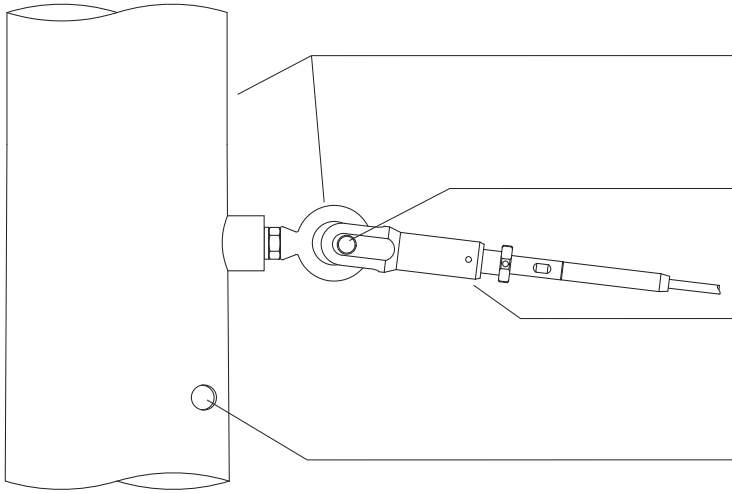

Pole and eye-bolt design
(evaluated on a project-specific basis)

Clevis pin

Clevis Assembly
(evaluated on a project-specific basis)

Feed hole
for luminaires

Example Wall Anchor Detail

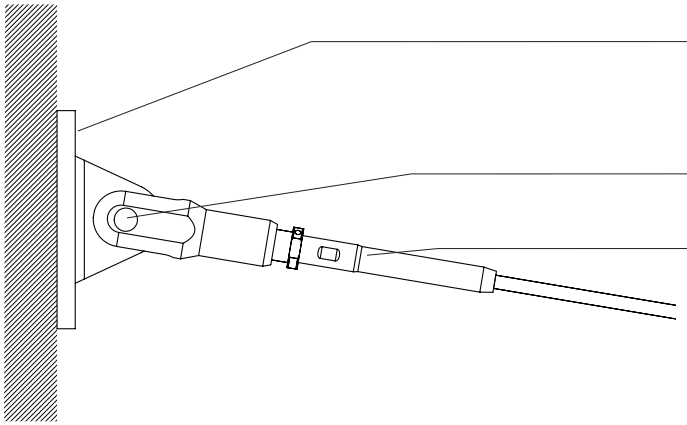

Wall bracket
(evaluated on a project-specific basis)

Clevis pin

Clevis Assembly
(evaluated on a project-specific basis)

Freedom of design

Catenary design examples shown here are only a few of the many possibilities you have. Consult with Selux to bring your unique catenary ideas to life.

Building-to-Building

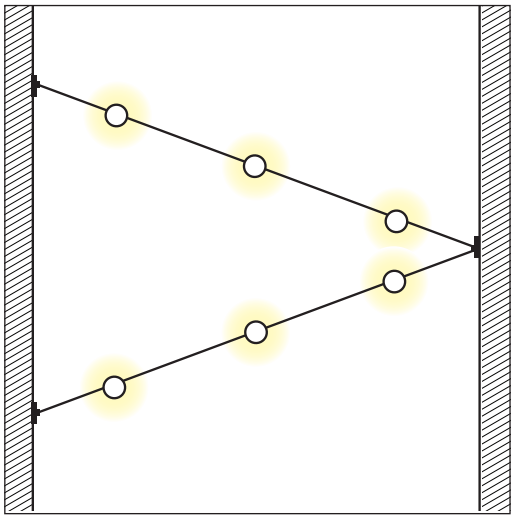

Pole-to-Pole X-Configuration

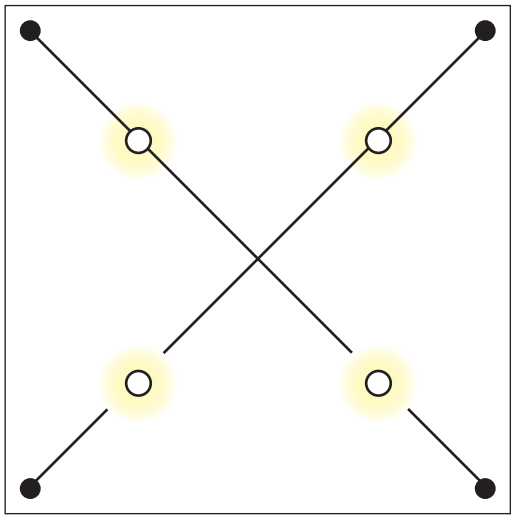

Pole-to-Pole or Building Linear Configuration

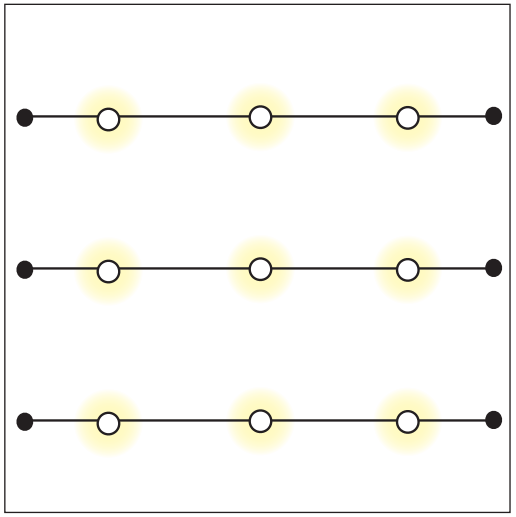

Pole-to-Pole Space Configuration

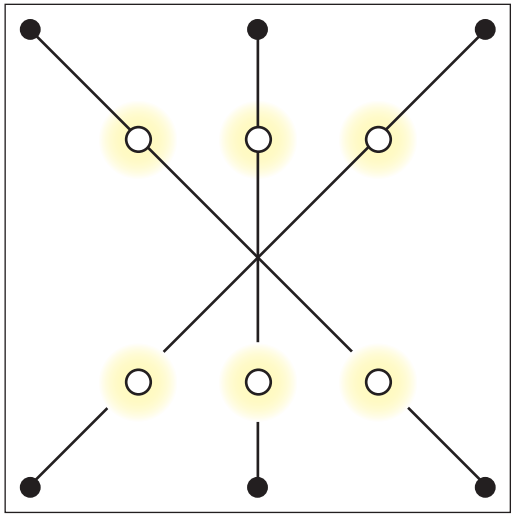

Purposeful light and shadow,
create mood and drama

When using catenary, Melli can be installed just about anywhere that people gather. Not only does it light up the space, but it improves visibility and safety. Melli catenary can be used in outdoor retail areas, public parks and squares, outdoor theaters, or festival sites. Even consider interior spaces that could be amplified with a creative catenary installation!

No obtrusive poles means that people can feel free to move around and utilize the beautiful space. The cables used in the Melli Catenary system allow for long spans while supporting the weight of the luminaires you need to cover your area. The cables are usually anchored to buildings, walls, or poles.

With Melli Catenary, you have complete freedom to design the project the way you want and to create the mood or ambiance your space calls for.

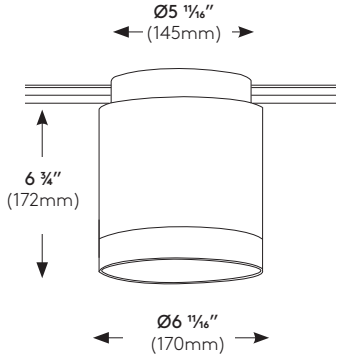

Catenary
Short Cylinder shown

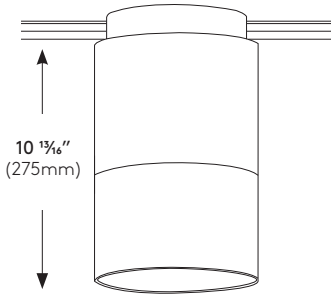

Catenary
Long Cylinder shown



Pedestrian Pathway

Use Melli pole mount to increase security in retail locations or suburban neighborhoods while encouraging people to meet and build community. Use a variety of optics and pole spacing to create the amount of light needed, where it is needed. You could even include a Melli Sistema pole with multiple fixtures to aim light into larger areas while maintaining the design language of the space.

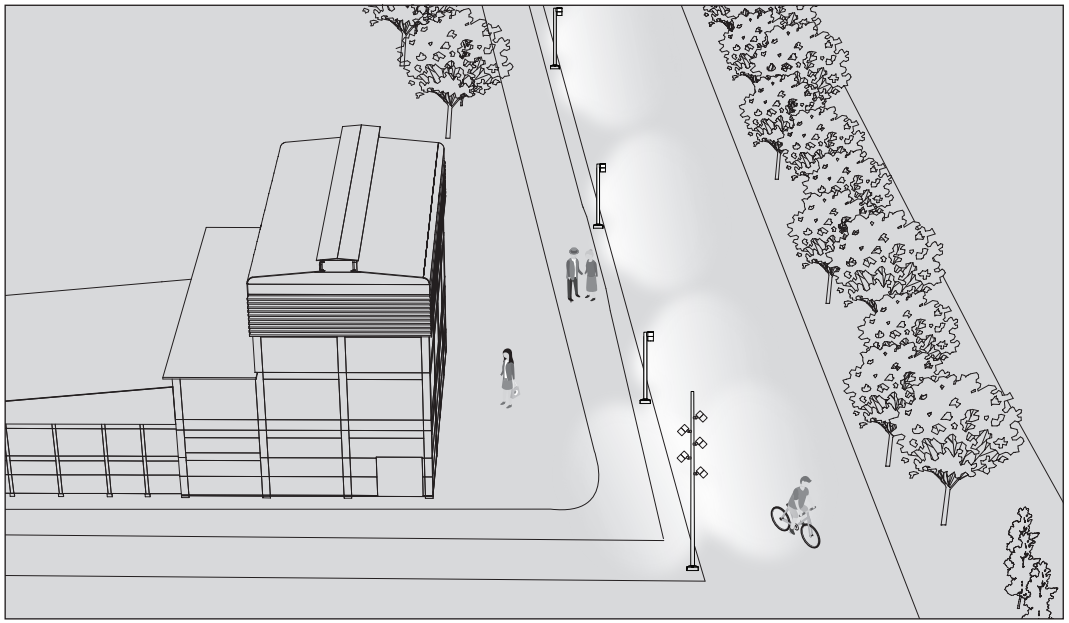

Facade Lighting

Use the wall mount Melli Spot with Direct or Direct/Indirect distributions to light up the sides of a building. A variety of distributions provide wide beams, or precise, dramatic lighting patterns. Melli Sistema Wall mount fixtures increase the coverage by allowing for adjustability and aiming the light.

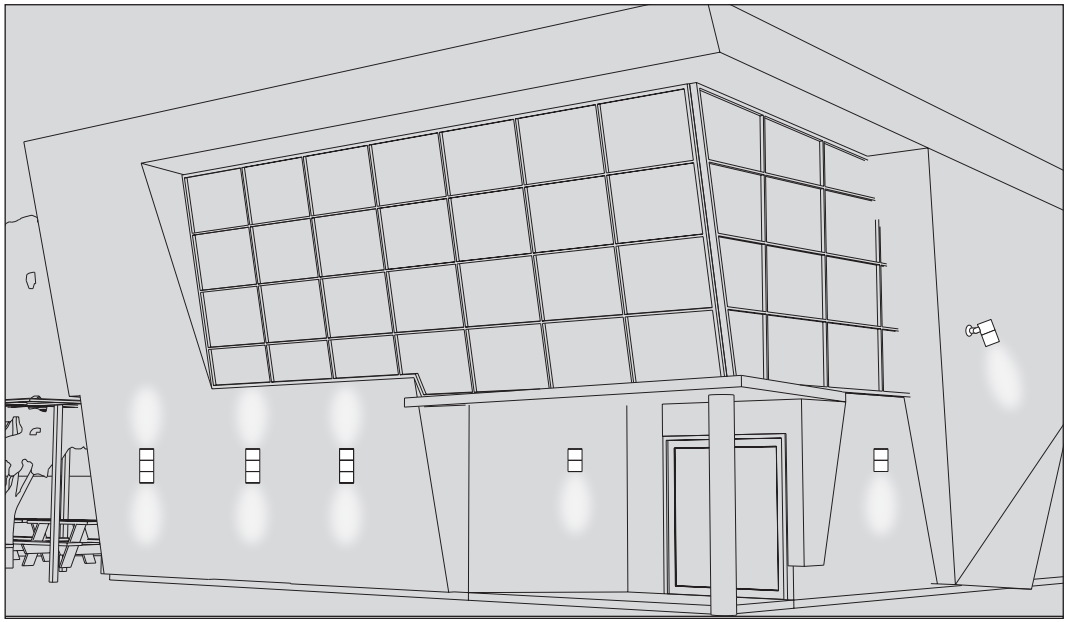

Catenary (Pole-to-Building)

Open up public spaces by removing typical lighting posts and using catenary mounted Melli. Hang the fixtures between poles or buildings - or a combination of both - it frees up space for walking or gathering, while still allowing comfortable and voluminous lighting.

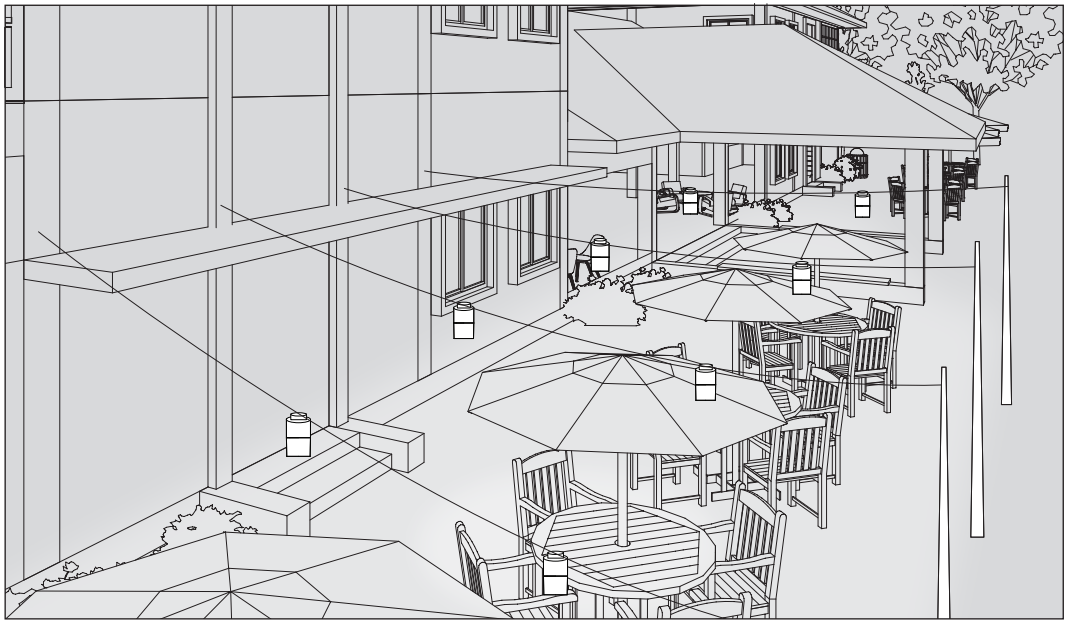

Under Canopy

By mounting Melli under a canopy or in a passageway, you can bring a level of safety and welcome feeling to building exteriors and pathways.



Selux Metal Finishes

Tiger Drylac powder-coated finishes are available in standard colors. Melli is also available in Premium Colors from the Selux RAL book, or custom colors on a project-specific basis.

WH - white

BK - black

BL - semi-matte black

SV - silver

BZ - bronze

SP - pemium color



Melli

When seeking a product prioritizing sustainability and the environment

Declare is a platform to share and find healthy building products. Manufacturers willingly disclose product information that can be found on the Declare labels. These labels are then accessible on a free and searchable database used by prominent designers, real estate owners and home owners, to specify products they know they can trust and that meet the requirements of leading green building standards, including Core Green Building, LBC, LEED, and WELL Certification.

Declare has positively changed the materials marketplace to enable the creation of buildings that support human and environmental health and has made it extremely easy to facilitate and simplify the exchange of information.

Selux is also proud to be Living Future Corporate Member. With this credential, Selux is recognized for its proficiency in the world's more ambitious, advanced, and holistic sustainable design standards.

You can trust that with these credentials, Melli by Selux supports a more sustainable future.

LIVING FUTURE
CORPORATE MEMBER

Declare.

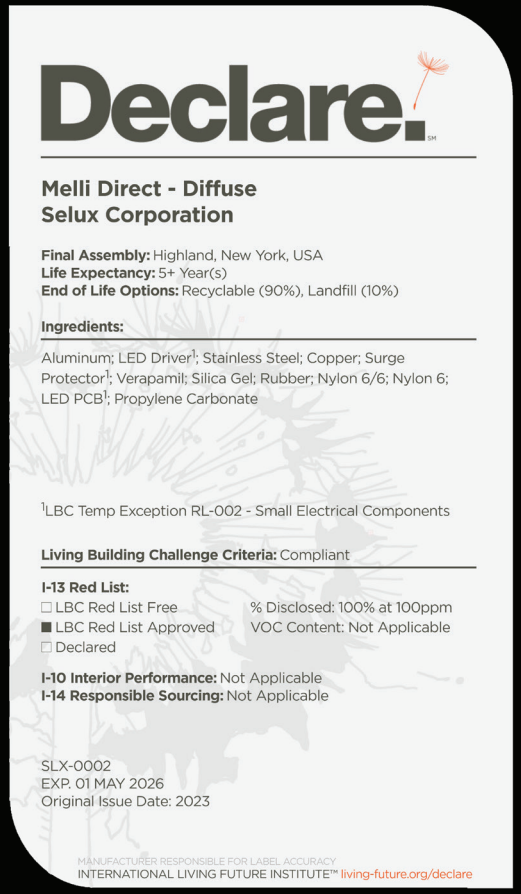



Publisher
Selux Corporation
5 Lumen Lane
Highland, NY 12528
www.selux.us

Edited by (responsible)
Selux Corporation

Concept and Design
Selux Corporation
www.selux.us

Print
Selux Corporation
5 Lumen Lane
Highland, NY 12528

Selux is a registered trademark of the Selux Corporation. Errors accepted and subject to change due to technical modifications. For conditions of sale and delivery please refer to www.selux.us.

The use of the text and images, even in part, is in breach of copyright without the consent of the Selux Corporation and punishable. This also applies to copies, translations, microfilming and processing with electronic systems.

April 16, 2025 5:05 PM